IGAP-820+

Industrial Computer Source (Deutschland) GmbH

Din-Rail Wireless Access Point

Industrial IEEE 802.11 ac/g/n wireless access point with 2x10/100/1000Base-T(X)

Features

- **High Speed Air Connectivity: WLAN interface support up to 1.3Gbps link speed**
- Highly Security Capability: WEP/WPA/WPA-PSK(TKIP,AES)/ WPA2/WPA2-PSK(TKIP,AES)/802.1X Authentication supported
- Support **X-Roaming < 60 ms**
- Support **wireless load balance**
- Support MAC Filter
- Support Long Distance Air Connectivity
- Provide Digital Input and Digital Output
- Support AP/Client Mode
- Support Multiple-SSID to 4 SSID
- Switch Mode Supported: Daisy Chain support to reduce usage of switch ports
- Wireless connecting status monitoring
- Secured Management by HTTPS
- Event Warning by Syslog, Email, SNMP Trap, Relay and Beeper
- Rigid IP-30 housing design
- DIN-Rail and Wall-mount enabled

DI/DO Definition

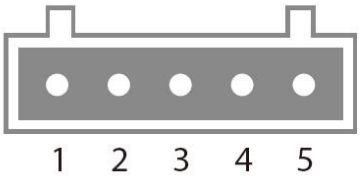

Digital Input Pin Definition

PIN	1	2	3	4	5
Function	DI1	DI2	DI3	DI4	COM

Digital Output Pin Definition

PIN	1	2	3	4	5
Function	DO1	DO2	DO3	DO4	GND

Dimension

Dimension (Unit =mm)

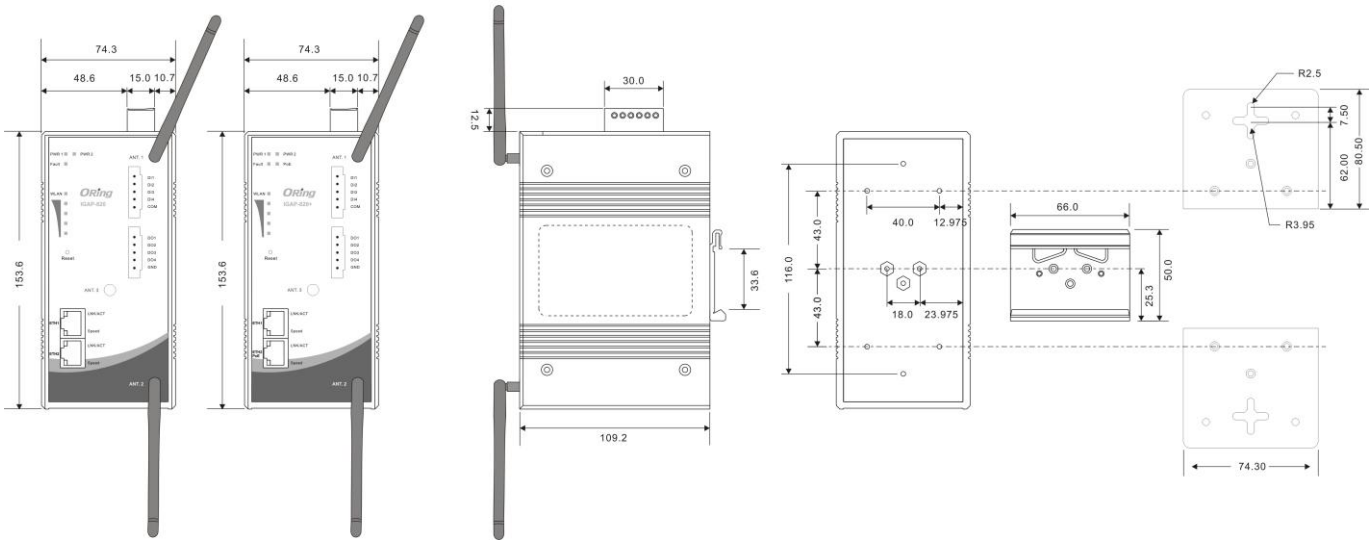

IGAP-820+

Industrial Computer Source (Deutschland) GmbH

Din-Rail Wireless Access Point

Specifications

ORing WLAN Access Point Model	IGAP-820	IGAP-820+
Physical Ports		
10/100/1000 Base-T(X) Ports in RJ45 Auto MDI/MDIX	**2**	
5-Pin Terminal Block	**2(DI x 4** and **DO x 4) :** Dry Contact: On: short to GND, Off: open Wet Contact (DI to COM/GND): On: 0 to 3VDC, Off: 10 to 30VDC	
Antenna Connector	**3**	
PoE P.D Port	-	Present at ETH2 Fully compliant with IEEE 802.3af Power Device specification Over load & short circuit protection Isolation Voltage: 1000 VDC min. Isolation Resistance : 10^8 ohms min
WLAN interface		
Operating Mode	AP/Client	
Antenna Connector	Reverse SMA Female	
Modulation	IEEE802.11a: OFDM IEEE802.11b: CCK/DQPSK/DBPSK IEEE802.11g: OFDM IEEE802.11n: BPSK, QPSK, 16-QAM, 64-QAM IEEE802.11ac: BPSK, QPSK, 16-QAM, 64-QAM, 256-QAM	
Frequency Band	America/FCC: 2.412~2.462 GHz 5.180~5.240 GHz & 5.745~5.825 GHz Europe CE/ETSI: 2.412~2.472 GHz 5.180~5.240 GHz	
Transmission Rate	802.11b: 11, 5.5, 2, 1 Mbps; 802.11g: 54, 48, 36, 24, 18, 12, 9, 6 Mbps 802.11n: up to 450Mbps 802.11ac : up to 1.3Gbps	
Transmit Power	802.11a: 15dBm ± 2dBm@54Mbps 802.11b: 18dBm ± 2dBm@11Mbps 802.11g: 15dBm ± 2dBm@54Mbps 802.11gn HT20: 13dBm ± 2dBm @MCS7 802.11gn HT40: 13dBm ± 2dBm @MCS7 802.11an HT20: 13dBm ± 2dBm @MCS7 802.11an HT40: 12dBm ± 2dBm @MCS7 802.11ac VHT80: 10dBm ± 2dBm @MCS9	
Receiver Sensitivity	802.11a : -65dBm ± 2dBm@54Mbps 802.11b : -76dBm ± 2dBm@11Mbps 802.11g : -65dBm ± 2dBm@54Mbps 802.11gn HT20:-64dBm ± 2dBm@MCS7 802.11gn HT40:-61dBm ± 2dBm@MCS7 802.11an HT20:-64dBm ± 2dBm@MCS7 802.11an HT40:-61dBm ± 2dBm@MCS7 802.11ac VHT80:-51dBm ± 2dBm@MCS9	
Encryption Security	WEP: (64-bit ,128-bit key) WPA/WPA2 PSK :TKIP and AES encryption (802.11i) 802.1X/RADIUS Authentication supported	
Wireless Security	SSID broadcast disable and enable	
Protocol Support		
Protocol	ARP,BOOTP, DHCP, DNS, HTTP, IP, ICMP, SNTP, TCP, UDP, RADIUS, SNMP, STP, RSTP	
LED Indicators		
Power Indicator	3 x LEDs, PWR1(2)(PoE)/Ready: Red On : Power is on and booting up Green On : Power is on and functioning Normal	

Din-Rail Wireless Access Point

10/100/1000Base-T(X) RJ45 Port Indicator	2 x LEDs, Green for port Link/Act at 1000Mbps Amber for port Link/Act at 100Mbps.	
WLAN LED	Green Solid On: RF on, Blink: data transmitting Green for WLAN Strength: 1<25%, 2<50%, 3<75%, 4<100%	
Fault	1 x LED, Red for Ethernet link down or power down indicator	
Fault contact		
Relay	Relay output to carry capacity of 1A at 24VDC	
Power		
Redundant Input Power	Dual DC inputs. 12~48VDC on 6-pin terminal block	
Power Consumption (Typ.)	7.5W	8.5W
Overload Current Protection	Present	
Reverse Polarity Protection	Present on terminal block	
Physical Characteristic		
Enclosure	IP-30	
Dimension (W x D x H)	74.3(W) x 109.2(D) x 153.6(H) mm (2.93 x 4.3 x 6.05 inch.)	
Weight (g)	1150	1155
Environmental		
Storage Temperature	-40 to 85°C (-40 to 185°F)	
Operating Temperature	-25 to 70°C (-13 to 158°F)	
Operating Humidity	5% to 95% Non-condensing	
Regulatory Approvals		
EMI	FCC Part 15, CISPR (EN55022) class A	
EMS	EN61000-4-2 (ESD), EN61000-4-3 (RS), EN61000-4-4 (EFT), EN61000-4-5 (Surge), EN61000-4-6 (CS), EN61000-4-8, EN61000-4-11	
Shock	IEC60068-2-27	
Free Fall	IEC60068-2-32	
Vibration	IEC60068-2-6	
Safety	EN60950-1	
Warranty	5 years	

Ordering Information

IGAP-ABOC

Code Definition	Wireless Mode	10/100/1000Base-T(X) Port Number	PoE Identification
Option	**- 1:** 802.11 b/g **- 2:** 802.11 a **- 3:** 802.11 a/b/g **- 4:** 802.11 b/g/n **- 5:** 802.11 a/n **- 6:** 802.11 a/b/g/n **- 8:** 802.11 ac/g/n	**-"2":** 2 ports	**-"+":** PoE P.D. present at ETH2

Available Model	Model Name	Description
	IGAP-820_US	Industrial IEEE 802.11 ac/g/n wireless access point with 2x10/100/1000 Base-T(X), US band

IGAP-820+

Industrial Computer Source (Deutschland) GmbH

Din-Rail Wireless Access Point

[redacted]	**IGAP-820_EU**	Industrial IEEE 802.11 ac/g/n wireless access point with 2x10/100/1000 Base-T(X), EU band
	IGAP-820+_US	Industrial IEEE 802.11 ac/g/n wireless access point with 2x10/100/1000 Base-T(X), 1-port PoE P.D, US band
	IGAP-820+_EU	Industrial IEEE 802.11 ac/g/n wireless access point with 2x10/100/1000 Base-T(X), 1-port PoE P.D, EU band

Packing List

- **IGAP-820/IGAP-820+ x 1**
- **CD x 1**
- **Quick Installation Guide x 1**
- **Antenna x 3**
- **Din-Rail Kit x 1**
- **Wall-Mount Kit x 2**
- **6-Pin Terminal Block x 1**
- **5-Pin Terminal Block x 2**
- **Dust Cover x 2**

Optional Accessories

- **DR-45 series : 45 Watts power supply**
- **DR-75 series : 75 Watts power supply**
- **DR-120 series : 120 Watts power supply**
- **WLAN RF Antenna (Omni-directional) series**
- **RF Antenna Base (Magnetic) series**
- **RF Cable series**